HARMONY PULL OUT CORNER MODULE FOR KITCHEN FURNITURES

emuca
where creation begins

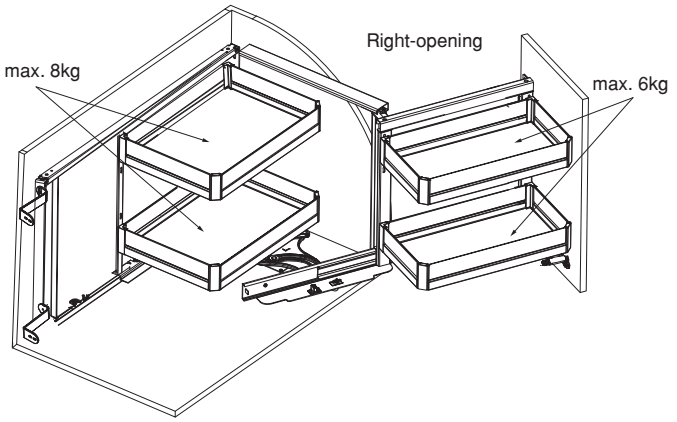

Specifications (Width x Depth x Height) (860~960mm x 530mm x 520mm)	Applicable Cabinet Internal Width 864~964mm

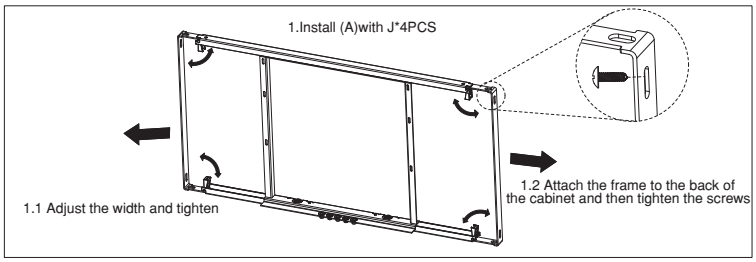

A X 1SET Rear Bracket	B X 1PCS Bracket Assembly	C X 1PCS Door Board Connection Assembly	D X 1PCS Lower End Assembly of the Swing Bracket	E X 1PCS Swing Bracket
F X 1SET Plastic Turntable	G X 1PCS Bracket Pivot Base Pad	H X 17PCS 4 x 16 Countersunk Head Self-tapping Screw	I X 1PCS Turntable Lever	J X 4PCS 5 x 18 Flat Head Self-topping Screw
K X 1SET Rotating Frame Pivot Pin	L X 1PCS Upper End PlasticPart	M X 1PCS Sleeve	N X 1PCS Lower End Plastic Part	O X 2PCS Rear Bracket Fixing Pad only required for cabinet width over 1000mm
P X 2PCS M5 x 12 Flat Head Machine Scerw				

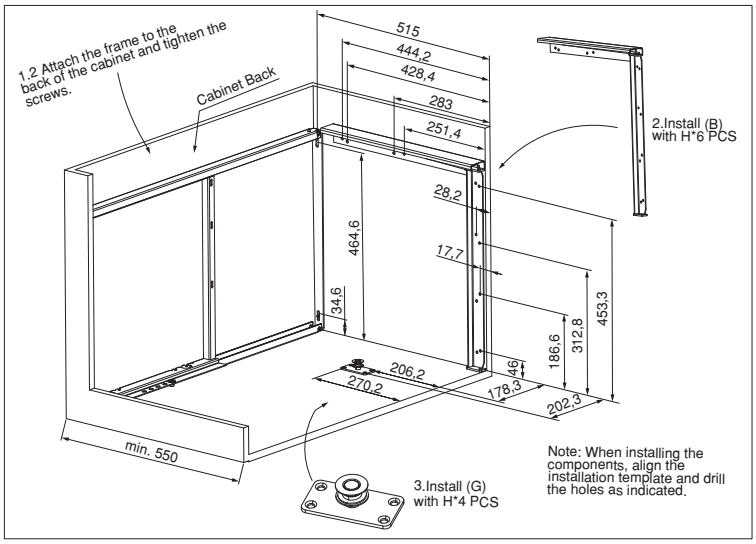

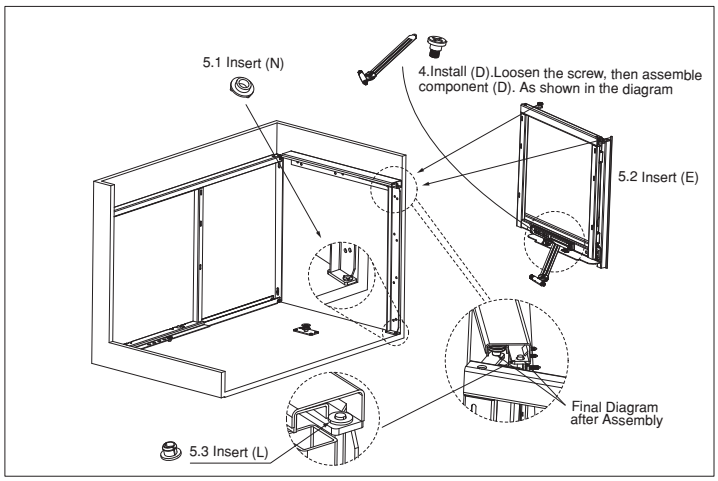

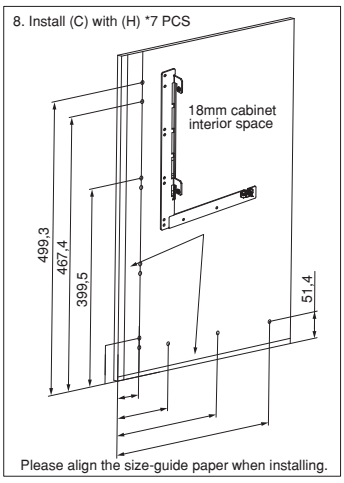

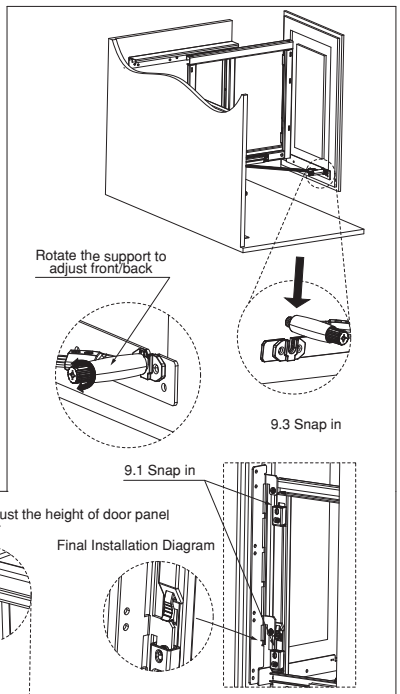

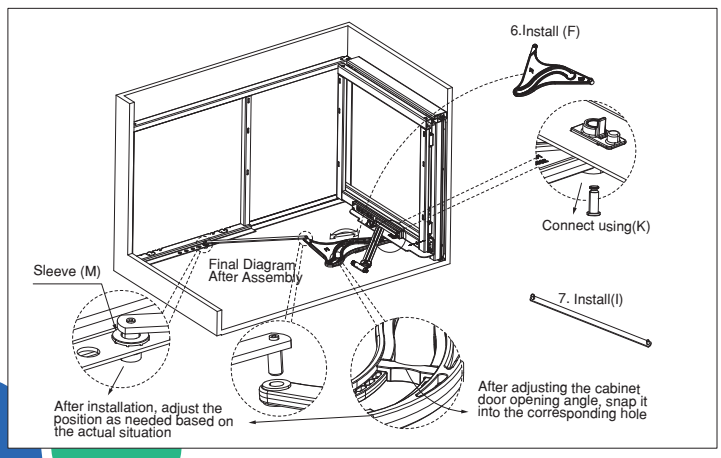

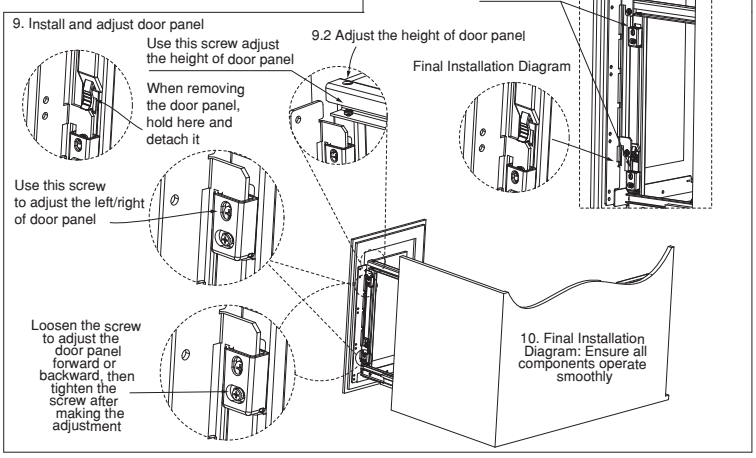

HARMONY PULL OUT CORNER MODULE FOR KITCHEN FURNITURES

emuca
where creation begins

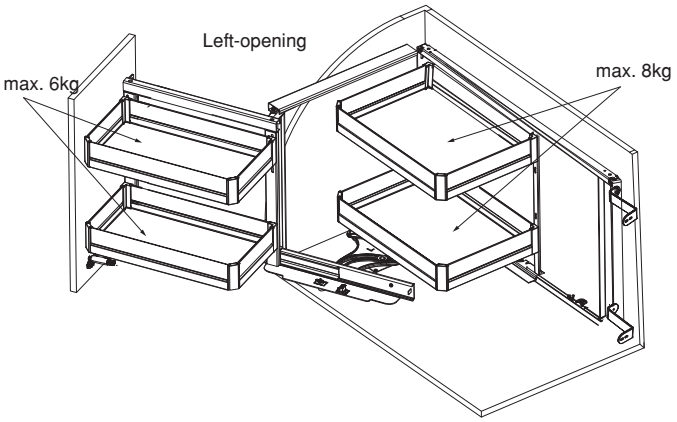
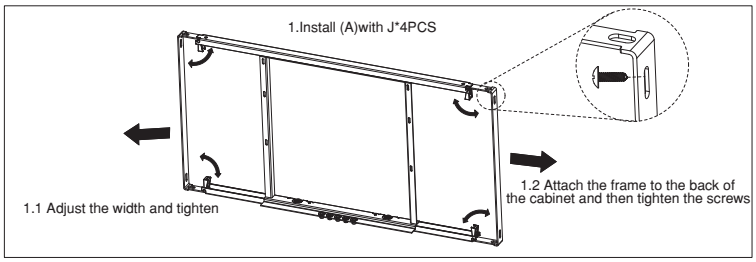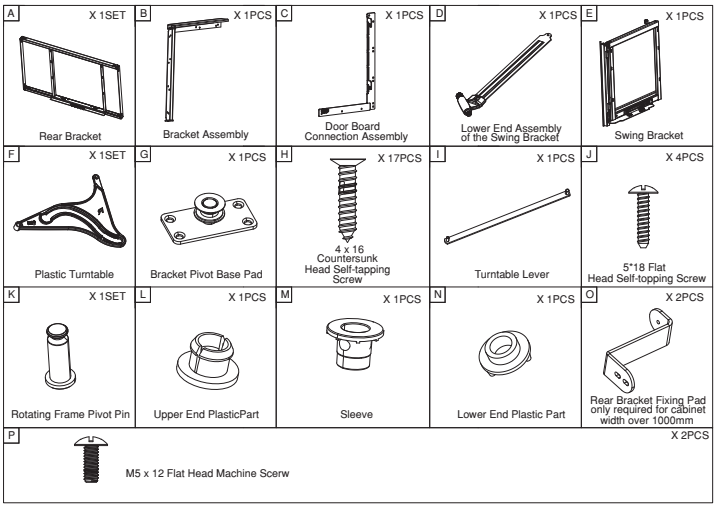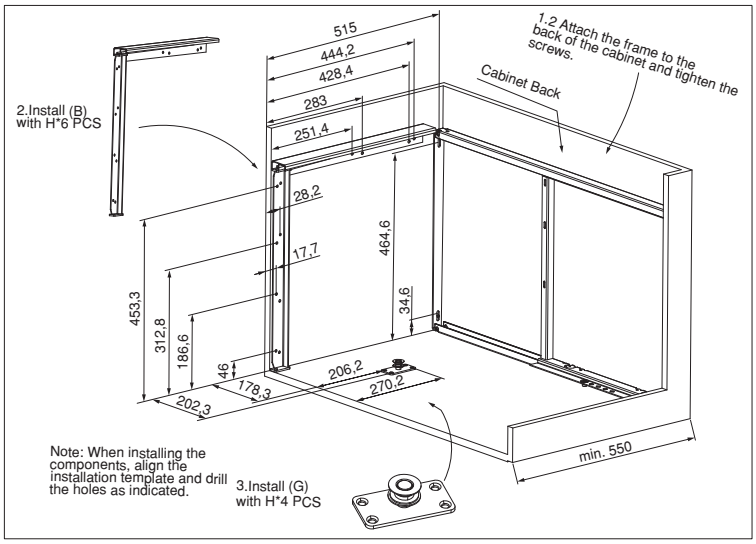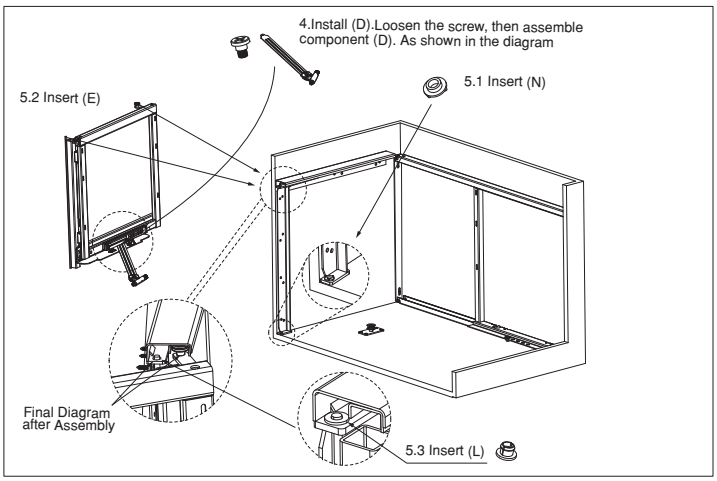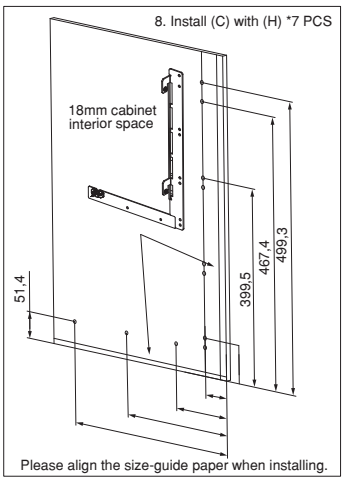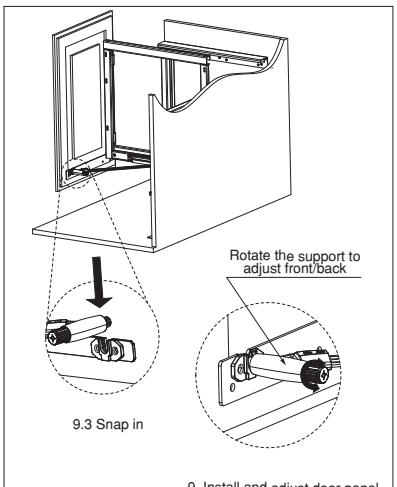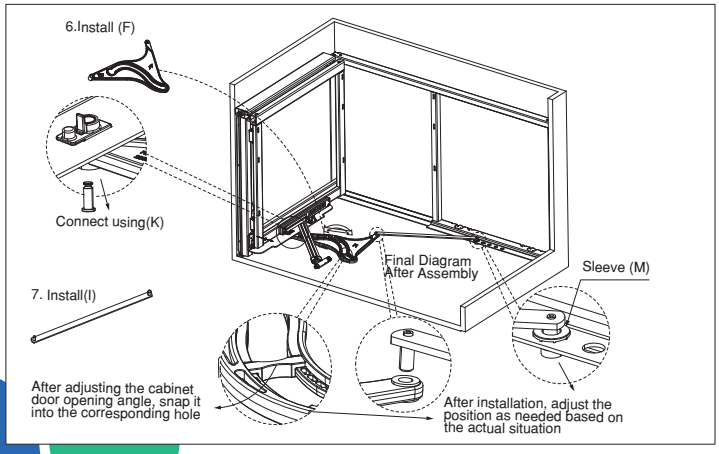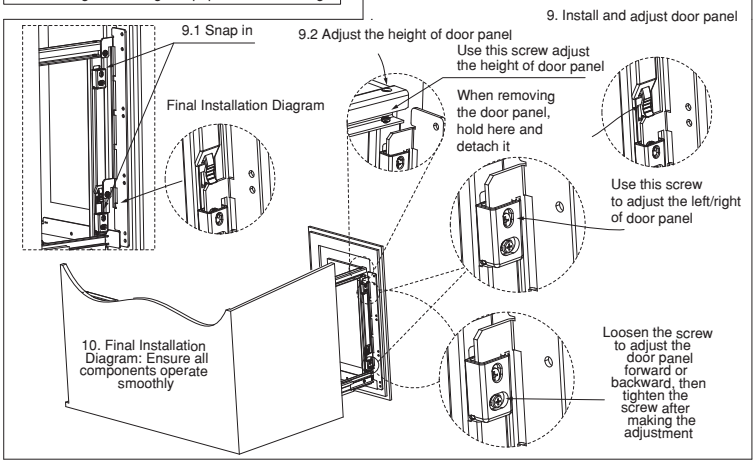
Specifications (Width x Depth x Height) (860~960mm x 530mm x 520mm)	Applicable Cabinet Internal Width 864~964mm